CALLOWAY™ RIGHT HEIGHT™ ELONGATED COMPLETE TOILET

VITREOUS CHINA

CALLOWAY™ RIGHT HEIGHT™ ELONGATED COMPLETE TOILET

❑ **091-2775-XX1BW**

- Vitreous china
- Low-consumption (6.0 Lpf/1.6 gpf)
- 16-1/2" rim height for accessible applications
- Elongated siphon action jetted bowl
- Pilot valve water control
- Fully glazed 2" trapway
- 2" Flapper flush valve
- Color-matched trip lever
- Sanitary bar on bowl
- 2 bolt caps
- Color-matched solid plastic seat with cover
- Wax ring gasket with closet bolts
- 100% factory flush tested
- One year total toilet warranty

Nominal Dimensions:
724 x 457 x 778mm
(28-1/2" x 18" x 30-5/8")

Compliance Certifications -
Meets or Exceeds the Following Specifications:

- ASME A112.19.2M for Vitreous China Fixtures - includes Flush Performance, Ball Pass Diameter, Trap Seal Depth and all Dimensions
- Los Angeles Department of Water and Power Supplementary Purchase Specification for Non-Adjustability

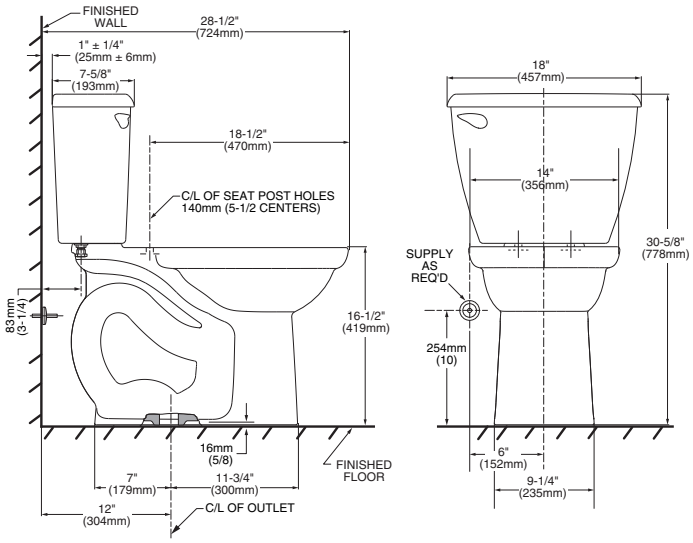

To Be Specified:
❑ Color: ❑ White ❑ Bone
❑ Supply with stop:

NOTES:
THIS COMBINATION IS DESIGNED TO ROUGH-IN AT A MINIMUM DIMENSION OF 305MM (12") FROM FINISHED WALL TO C/L OF OUTLET.
* DIMENSION SHOWN FOR LOCATION OF SUPPLY IS SUGGESTED. SUPPLY NOT INCLUDED WITH FIXTURE AND MUST BE ORDERED SEPARATELY.

IMPORTANT: Dimensions of fixtures are nominal and may vary within the range of tolerance established by ANSI Standard A112.19.2
These measurements are subject to change or cancellation. No responsibility is assumed for use of superseded or voided pages.

MEETS THE AMERICANS WITH DISABILITIES ACT GUIDELINES AND ANSI A117.1 REQUIREMENTS FOR ACCESSIBLE AND USABLE BUILDING FACILITIES-CHECK LOCAL CODES.

© 2009 Eljer