DARROW™ CLASSIC PEDESTAL SINK
VITREOUS CHINA

DARROW™ CLASSIC PEDESTAL SINK

- Traditional-styled basin with backsplash and matching pedestal
- Made from vitreous china
- Rear overflow
- Supplied with mounting kit
- Faucet ledge (faucet not included)

❏ **051-4424** Faucet holes on 4" (102mm) centers

Nominal Dimensions:
610 x 559 x 864mm
(24" x 20" x 34")

Separate Components:
❏ **051-4444** Pedestal top-4" (102mm) centers
❏ **281-4444** Pedestal only

Bowl sizes:
533mm (21") wide
305mm (12") front to back
152mm (6") deep

Compliance Certifications -
Meets or Exceeds the Following Specifications:
• ASME A112.19.2M for Vitreous China Fixtures

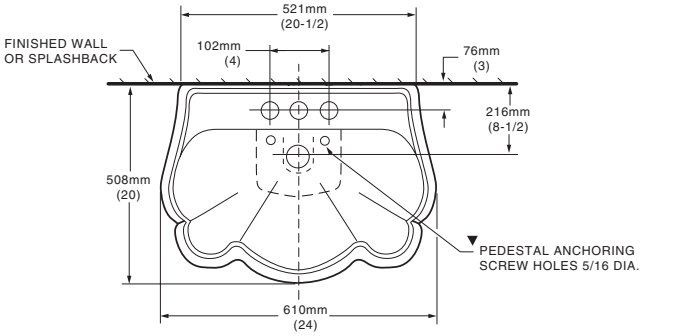

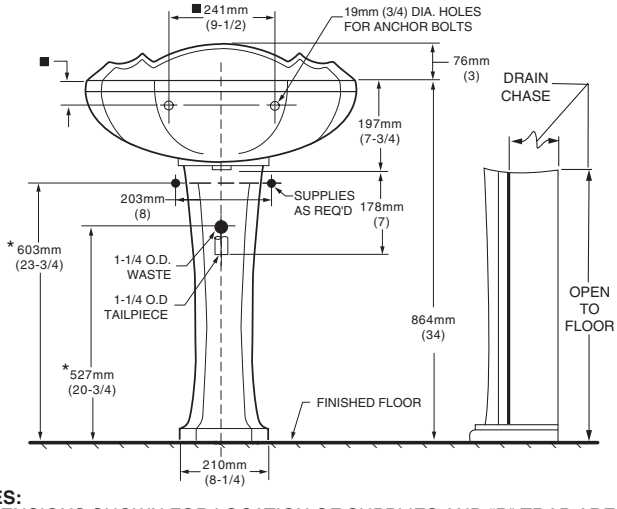

To Be Specified:
❏ Color: ❏ White
❏ Faucet:
❏ Faucet Finish:
❏ Supplies:
❏ 1-1/4" Trap:

NOTES:
* DIMENSIONS SHOWN FOR LOCATION OF SUPPLIES AND "P" TRAP ARE SUGGESTED.
▼ PEDESTAL ANCHORING SCREWS NOT INCLUDED.
■ SUITABLE FOR REINFORCEMENT ONLY. ACTUAL DIMENSIONS MUST BE TAKEN FROM FIXTURE.
FITTINGS NOT INCLUDED AND MUST BE ORDERED SEPARATELY.
PROVIDE SUITABLE REINFORCEMENT FOR ALL WALL SUPPORTS.
INSTALLATION INSTRUCTIONS SUPPLIED WITH LAVATORY.

IMPORTANT: Dimensions of fixtures are nominal and may vary within the range of tolerances established by ANSI Standard A112.19.2.
These measurements are subject to change or cancellation. No responsibility is assumed for use of superseded or voided pages.

© 2009 Eljer