EST. 1904

ELJER

BY AMERICAN STANDARD

Diplomat™ Tall Height Elongated 10″ Rough Complete Toilet

VITREOUS CHINA WITH EVERCLEAN®

BARRIER FREE

Diplomat™ Tall Height Elongated 10″ Rough Complete Toilet

❑ **0913280N/ST-XXB**

- Vitreous china made, low consumption toilet (1.6 gpf/6.0 Lpf)
- Generous 9″ x 8″ water surface area with PowerWash® rim that scrubs the bowl with each flush
- 3″ flush valve with fully-glazed 2-1/8″ trapway
- 10″ (254 mm) rough-in toilet with 16-1/2″ rim chair height bowl for accessible applications
- Includes no-tools, EZ-Install floor bolts, wax ring and color match bowl caps kit
- Includes EverClean® surface that inhibits the growth of bacteria, mold and mildew
- Includes slow-close seat and lid
- Chrome finish trip lever is supplied (other finishes available as special order)
- Obtains best 1,000g MaP flush score** at 1.6 gpf
- Industry-leading lifetime warranty on chinaware, 5 year warranty on all mechanical parts and 1 year warranty on seat

Nominal Dimensions:
28-1/4″ x 17-1/4″ x 30-1/4″
(718 x 438 x 768 mm)

Compliance Certifications - Meets or Exceeds the Following Specifications:

- ASME A112.19.2/CSA B45.1 for Vitreous China Fixtures

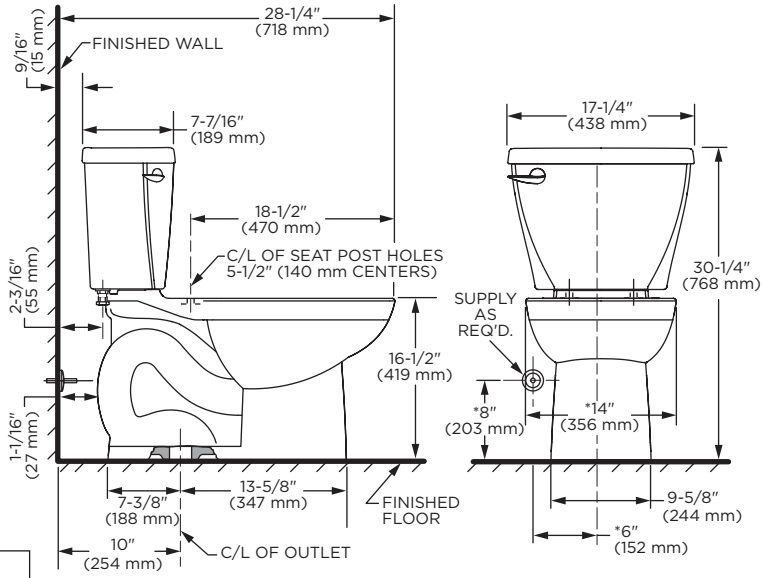

To Be Specified:
❑ Color: ❑ White
❑ Supply with stop:

NOTES:
THIS COMBINATION IS DESIGNED TO ROUGH-IN AT A MINIMUM DIMENSION OF 254 MM (10″) FROM FINISHED WALL TO C/L OF OUTLET.
* DIMENSIONS SHOWN FOR LOCATION OF SUPPLY ARE SUGGESTED.SUPPLY NOT INCLUDED WITH FIXTURE AND MUST BE ORDERED SEPARATELY.

** Maximum Performance (MaP) testing performed by IAPMO R&T Lab. MaP Report conducted by Gauley Associates Ltd. and Koeller and Company.

IMPORTANT: Dimensions of fixtures are nominal and may vary within the range of tolerance established by ANSI Standard A112.19.2. These measurements are subject to change or cancellation. No responsibility is assumed for use of superseded or voided pages.

ADA **MEETS THE AMERICANS WITH DISABILITIES ACT GUIDELINES AND ICC ANSI A117.1 REQUIREMENTS FOR ACCESSIBLE AND USABLE BUILDING FACILITIES-CHECK LOCAL CODES.**

EVERCLEAN®

© 2021 Eljer

PART OF LIXIL